Atlantic Utility Service. 6640 Old Cheney Hwy. Orlando, FL 32826. PH (407)257.5265 FAX (407)281.6070
e-mail: sales@atlanticutilityservice.com

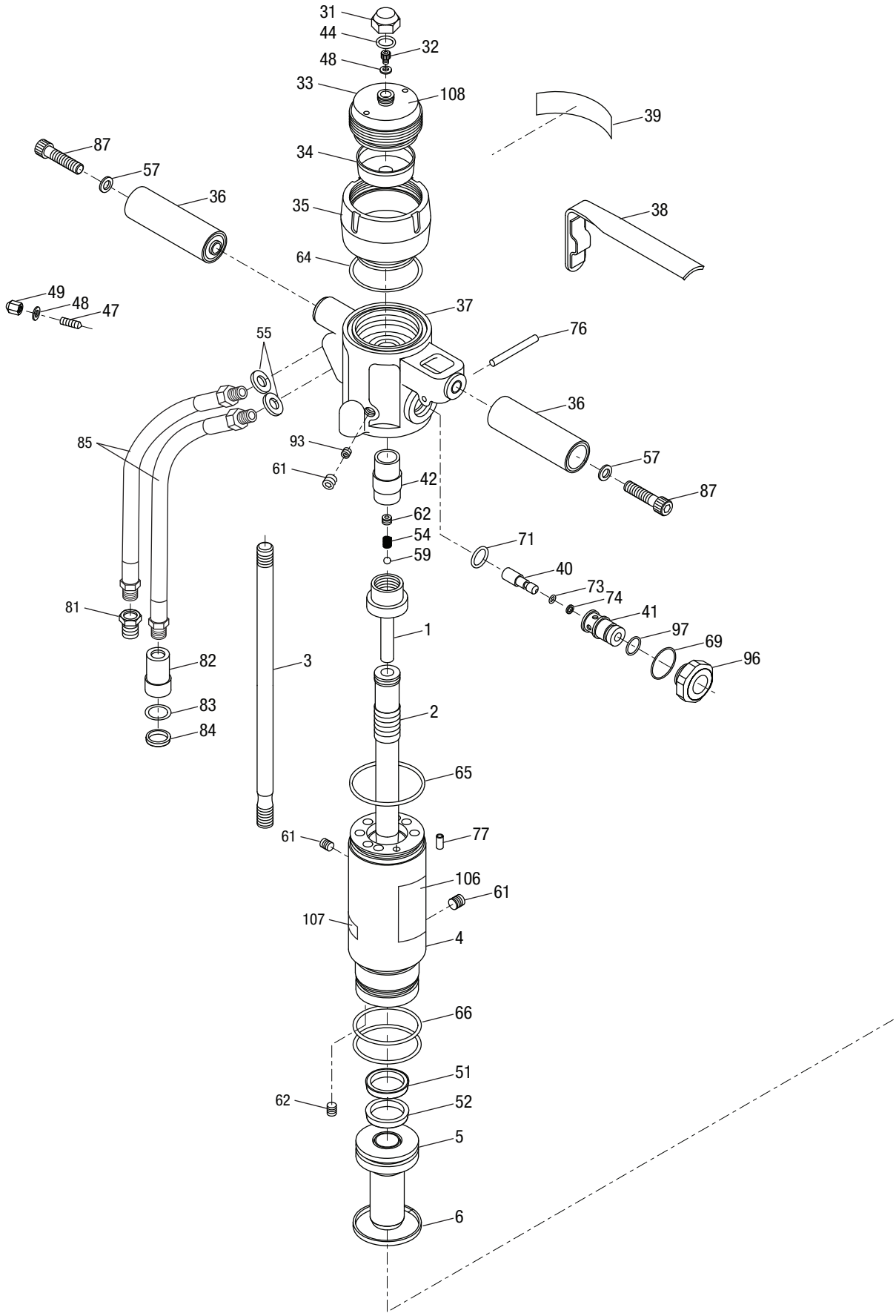

Atlantic Utility Service. 6640 Old Cheney Hwy. Orlando, FL 32826. PH (407)257.5265 FAX (407)281.6070
e-mail: sales@atlanticutilityservice.com

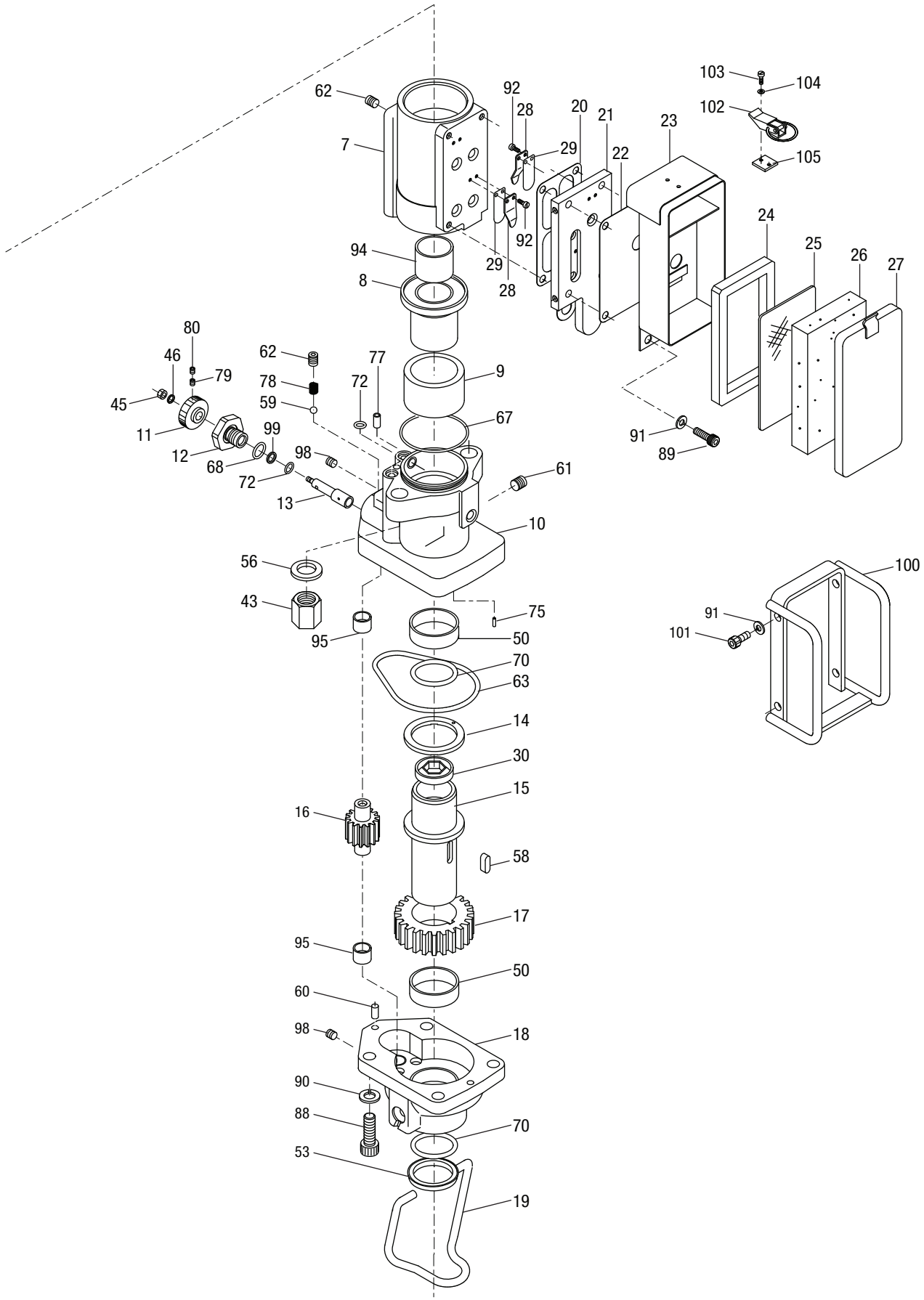

Atlantic Utility Service. 6640 Old Cheney Hwy. Orlando, FL 32826. PH (407)257.5265 FAX (407)281.6070
e-mail: sales@atlanticutilityservice.com

Parts List

Key	Part No.	Description	Qty
1	52046167	Inner tube	1
2	52046168	Piston	1
3	50460323	Bolt	2
4	52046169	Cylinder	1
5	52046170	Hammer piston	1
6*		Piston ring	1
7	50460366	Compression cylinder	1
8	52046171	Bush	1
9	52046172	Collar	1
10		Motor block	1
11		Dial knob	1
12		Valve guide	1
13		Selector valve	1
14	50460447	Washer	1
15	50460455	Internal shaft	1
16	50460463	Idle gear	1
17	50460471	Drive gear	1
18		Gear housing (A)	1
19	52046177	Drill stay (A)	1
20		Seat packing	1
21		Valve seat	1
22		Packing (B)	1
23		Cleaner case	1
24	50460579	Packing	1
25	50460587	Element	1
26	50460595	Cleaner sponge	1
27		Cleaner cover	1
28		Retainer (B)	4
29		Lead valve	4
30	50460641	Air seal	1
31		Nut	1
32		Cap bolt	1
33		Lid	1
34	50460692	Diaphragm	1
35		Shell	1
36		Handle grip	2
37		Valve body	1
38	50460730	Control lever	1
39		Decal, identification	1
40	50460757	Valve rod	1
41	52046182	Valve guide	1
42	50460773	Control valve	1
43	52046232	Nut	2
44*		O-ring	1
45		Nut	1
46		Washer	1
47	52046186	Screw, cone point	1
48*		Seal washer	1
49	52046188	Cap nut	1
50	52046189	Bush (A)	2
51*		U-cup packing	1
52*		Dust seal	1
53*		Dust seal	1
54*		Compression spring	1
55*		Seal washer	2
56	50460854	Washer	2
57		Washer	2
58	52046192	Key	1
59*		Steel ball	1
60	52046236	Roller, 6x12	2
61	50459830	Plug	7
62	50460897	Plug	5
63*		O-ring	1
64*		O-ring G65	1
65*		O-ring G60	1
66*		O-ring	2
67*		O-ring	1
68*		O-ring	1
69*		O-ring CO0621	1
70*		O-ring	2
71*		O-ring	1
72*		O-ring	3
73*		O-ring P5	1
74*		Backup ring P5	1
75*		Pin	1
76	50460170	Pin Ø5 x 36	1
77	50459783	Pin Ø6 x 20	2
78*		Spring	1
79		Screw	1
80		Screw (flat)	1
81	50461249	Coupler (male)	1
82	50461257	Coupler (female)	1
83	52046195	O-ring	1
84	50461273	Backup ring	1
85	52046196	Hydraulic hose	1
87		Bolt, hex socket M12 x 50	2
88	50461303	Bolt	4
89	50461311	Bolt	4
90	50461320	Washer	4
91	50461338	Washer	4
92		Screw	8
93*		M6 orifice (2.8)	1
94	52046198	Oiles Drymet LF bushing	1
95*		DU bush	2
96	52046200	Bush	1
97*		O-ring	1
98*		Kenick expander	3
99*		Backup ring	1
100	52046204	Guard	1
101	52046205	Bolt	4
102		Patent fastener	1
103		Screw	4
104		Washer	4
105		Nut	4
106		Decal, warning, eye	1
107		Decal, pressure/flow/weight	1
108		Decal, caution	1

Kits

*	52046211	Repair kit (includes items marked with an asterisk)
	52046303	Decal kit (includes items 39, 106–108)
	52046304	Accumulator kit (includes items 31–35, 44, 48, 64)
	52046305	Plug kit (includes items 31, 32, 44, 48)
	52046306	Valve body assembly (includes items 37, 61, 93)
	52046307	Motor block assembly (includes items 10, 50, 61, 75, 95, 98)
	52046308	Gear housing assembly (includes items 18, 50, 95, 98)
	52046309	Selector valve assembly (includes items 11–13, 45, 46, 68, 72, 79, 80, 99)
	52046310	Handle kit (includes two each of items 36, 57, 87)
	52046311	Compressor kit (includes items 20–29, 92, 102–105)
	52046312	Latch kit (includes items 102–105)