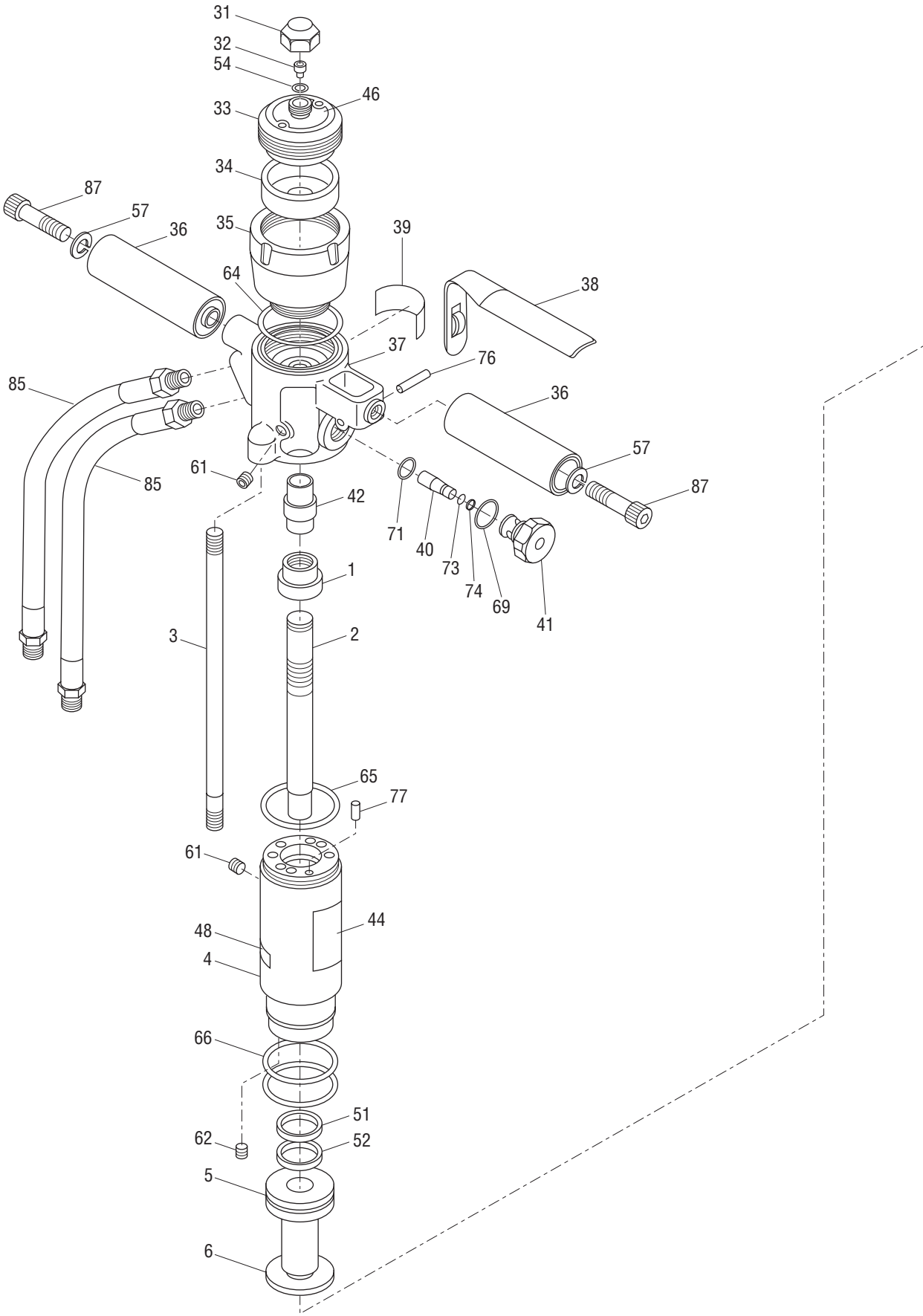
31
32
54
46
33
34
87
57
36
35
39
64
38
37
76
85
36
57
61
85
87
42
71
40
73
74
69
41
1
3
2
65
77
61
44
48
4
66
51
62
52
5
6

Atlantic Utility Service. 6640 Old Cheney Hwy. Orlando, FL 32826. PH (407)257.5265 FAX (407)281.6070
e-mail: sales@atlanticutilityservice.com

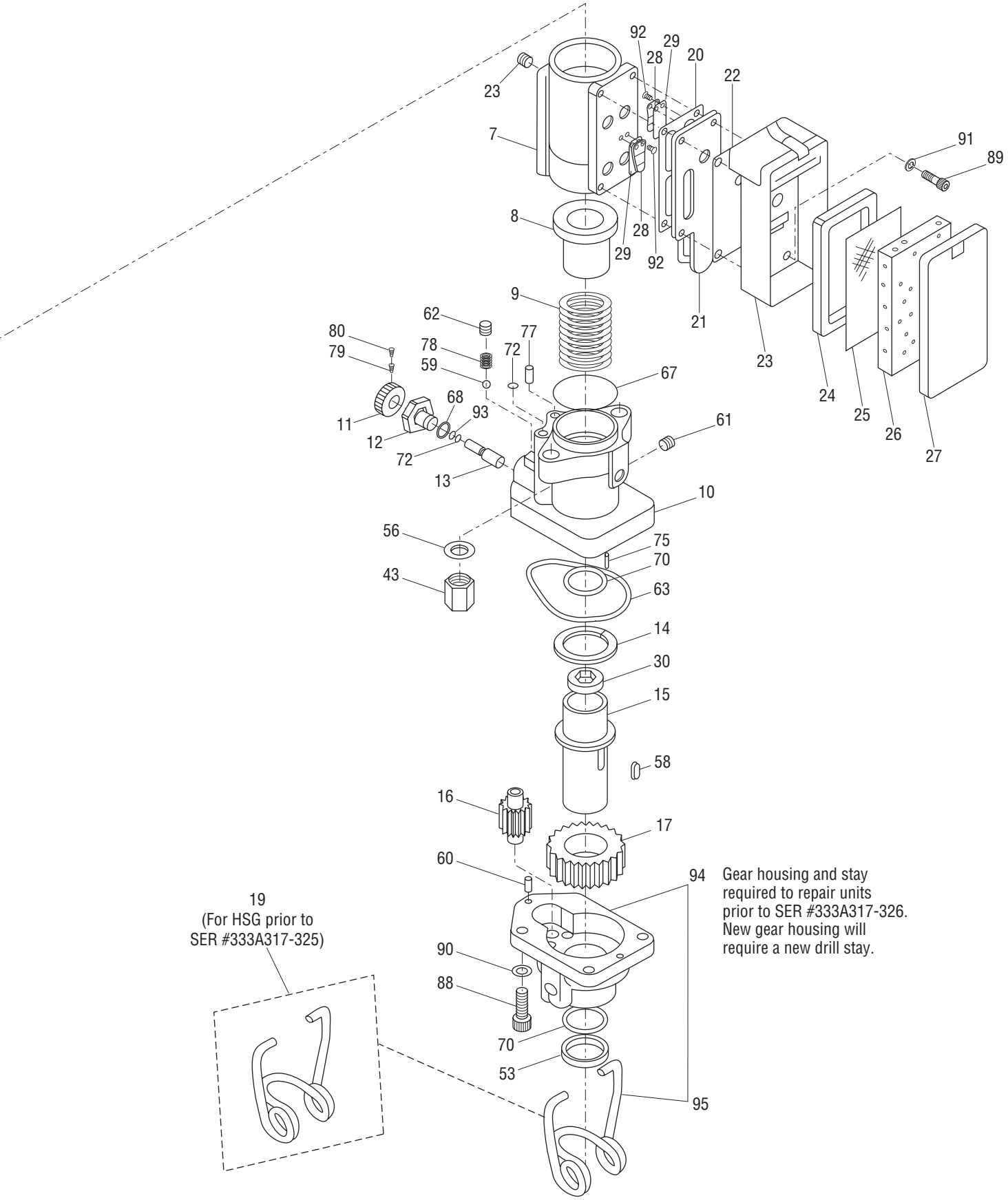

Key	UPC No. 78-3310-	Part No.	Description	Qty.
1	46030	50460307	Seal liner	1
2	46031	50460315	Piston	1
3	46032	50460323	Stud bolt	2
4	46033	50460331	Cylinder	1
5	46034	50460340	Hammer piston	1
6	46035	50460358	Piston ring	1
7	46036	50460366	Compressor cylinder	1
8	46037	50460374	Bush	1
9	46038	50460382	Spring	1
10	46039	50460390	Motor block	1
11	46041	50460412	Dial knob	1
12	46042	50460420	Valve guide	1
13	46043	50460439	Selector valve	1
14	46044	50460447	Thrust washer	1
15	46045	50460455	Internal shaft	1
16	46046	50460463	Idle gear	1
17	46047	50460471	Drive gear	1
18	46048	50460480	Gear housing (no longer available)	1
19	46049	50460498	Drill stay	1
20	46051	50460510	Seat packing	1
21	46052	50460528	Valve seat	1
22	46055	50460552	Packing	1
23	46056	50460560	Cleaner case	1
24	46057	50460579	Packing	1
25*	46058	50460587	Element	1
26*	46059	50460595	Cleaner sponge	1
27	46061	50460617	Cleaner cover	1
28	46062	50460625	Retainer	4
29	46063	50460633	Lead valve	4
30*	46064	50460641	Air seal	1
31	45999	50459996	Cap	1
32	46067	50460676	Cap bolt	1
33	46068	50460684	Lid	1
34	46069	50460692	Diaphragm	1
35	46071	50460714	Shell	1
36	46012	50460129	Handle grip	2
37	46072	50460722	Valve body	1
38	46073	50460730	Control lever	1
39		50017489	Decal, identification	1
40	46075	50460757	Valve rod	1
41	46076	50460765	Valve guide	1
42	46077	50460773	Control valve	1
43	46078	50460781	Nut	2
44	49009	49009	Decal, warning	1
46	46197	50461974	Decal, caution	1
48	45932	50459325	Decal, pressure/flow/weight	1
51*	46079	50460790	U-cup packing	1
52*	46081	50460811	Dust seal	1
53*	46082	50460820	Dust seal	1
54*	46083	50460838	Seal washer	1
56	46085	50460854	Washer	2
57	46029	50460293	Spring washer	2
58	46086	50460862	Key	1
59*	46087	50460870	Steel ball	1
60	46088	50460889	Roller	2
61	45983	50459830	Taper plug, hex socket PT1/8	7
62	46089	50460897	Plug	5
63*	46090	50460900	O-ring	1
64*	46016	50460161	O-ring G65	1
65*	45961	50459619	O-ring G60	1
66*	46091	50460919	O-ring	2
67*	46092	50460927	O-ring	1
68*	46093	50460935	O-ring	1
69*	46014	50460145	O-ring CO0621	1
70*	46094	50460943	O-ring	2
71*	45965	50459651	O-ring P14	1
72*	46095	50460951	O-ring	3
73*	45964	50459643	O-ring P5	1
74*	45970	50459708	Backup ring P5	1
75	46096	50460960	Pin	1
76	46017	50460170	Spring pin Ø5 x 36	1
77	45978	50459783	Spring pin Ø6 x 20	2
78*	46097	50460978	Spring	1
79	46098	50460986	Screw	1
85	45980	50459805	Hydraulic hose, 3/8 NPTF x 3/8 NPFT	2
87	46028	50460285	Bolt hex socket M12 x 50	2
88	46130	50461303	Bolt	4
89	46131	50461311	Bolt	4
90	46132	50461320	Washer	4
91	46133	50461338	Washer	4
92	46134	50461346	Screw	8
93*	46135	50461354	Backup ring	1

This assembly and stay are on hammers with Serial Numbers 333A317-326 and newer:

94		52024157	Gear housing	1
95		52024158	Drill stay	1

To service units with 504 6048.0 in a functional condition:

94	46048	50460480	Gear housing	1
95	46049	50460498	Drill stay	1

Kits

	46295	50462954	Kit, seal (including items marked with an asterisk)